THIS DRAWING IS UNPUBLISHED. RELEASED FOR PUBLICATION -.- .
© COPYRIGHT - BY TYCO ELECTRONICS CORPORATION. ALL RIGHTS RESERVED.

LOC	DIST
AD	00

REVISIONS

P	LTR	DESCRIPTION	DATE	DWN	APVD
	K	REV PER 0G3C-0224-05	14APR05	RB	JG

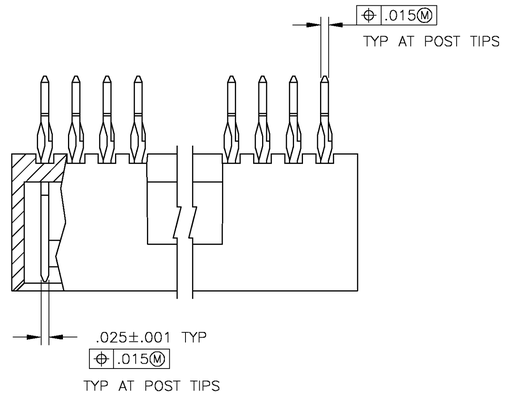

1. THE NOTED DIMENSIONS APPLY AT THE INTERSECTION OF THE POST AND HOUSING
2. POINT OF MEASUREMENT FOR PLATING THICKNESS
3. MATERIAL: HOUSING– FLAME RETARDANT THERMOPLASTIC, COLOR–BLACK
   POSTS– COPPER ALLOY
4. FINISH: POSTS– .000030 GOLD ON CONTACT AREA,
   .000100–.000200 MATTE TIN–LEAD ON SOLDERTAIL,
   ALL OVER .000050 NICKEL
5. FINISH: POSTS– .000030 GOLD ON CONTACT AREA,
   .000100–.000200 MATTE TIN ON SOLDERTAIL,
   ALL OVER .000050 NICKEL

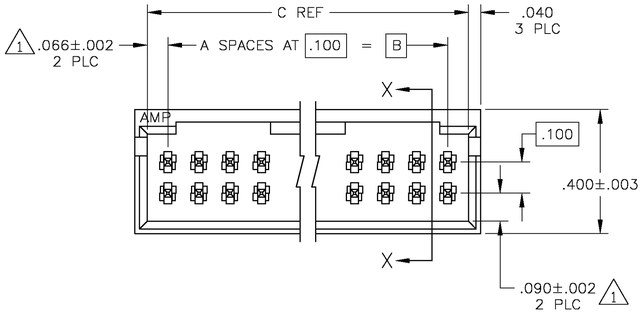

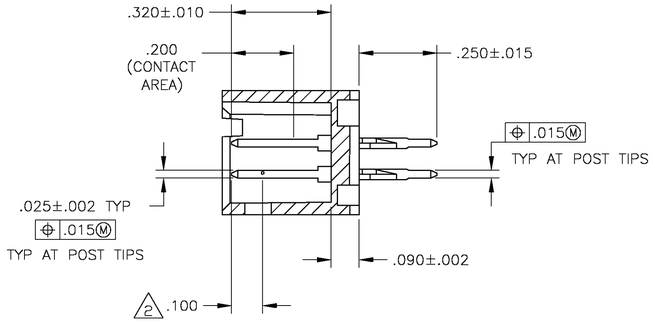

SECTION X–X

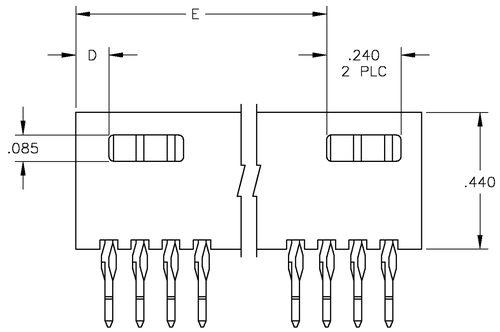

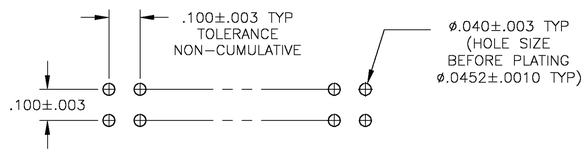

RECOMMENDED HOLE LAYOUT

	FINISH	E	D	C	B	A	NO OF POSN	ASSEMBLY PART NUMBER
	5	2.806	.106	3.032	2.900	29	60	7–102699–8
	5	2.306	.106	2.532	2.400	24	50	7–102699–3
	5	1.806	.106	2.032	1.900	19	40	6–102699–9
	5	1.506	.106	1.732	1.600	16	34	6–102699–6
	5	1.306	.106	1.532	1.400	14	30	6–102699–4
	5	1.106	.106	1.332	1.200	12	26	6–102699–2
	5	.806	.106	1.032	.900	9	20	5–102699–9
	5	——	.406	.932	.800	8	18	5–102699–8
	5	——	.306	.832	.700	7	16	5–102699–7
	5	——	.306	.732	.600	6	14	5–102699–6
	5	——	.206	.632	.500	5	12	5–102699–5
	5	——	.206	.532	.400	4	10	5–102699–4
	5	——	.106	.432	.300	3	8	5–102699–3
	5	——	.106	.332	.200	2	6	5–102699–2
	4	2.806	.106	3.032	2.900	29	60	2–102699–8
OBSOLETE	4	2.706	.106	2.932	2.800	28	58	2–102699–7
OBSOLETE	4	2.606	.106	2.832	2.700	27	56	2–102699–6
OBSOLETE	4	2.506	.106	2.732	2.600	26	54	2–102699–5
OBSOLETE	4	2.406	.106	2.632	2.500	25	52	2–102699–4
	4	2.306	.106	2.532	2.400	24	50	2–102699–3
OBSOLETE	4	2.206	.106	2.432	2.300	23	48	2–102699–2
OBSOLETE	4	2.106	.106	2.332	2.200	22	46	2–102699–1
OBSOLETE	4	1.906	.106	2.132	2.000	20	42	2–102699–0
	4	1.806	.106	2.032	1.900	19	40	1–102699–9
OBSOLETE	4	1.706	.106	1.932	1.800	18	38	1–102699–8
OBSOLETE	4	1.606	.106	1.832	1.700	17	36	1–102699–7
	4	1.506	.106	1.732	1.600	16	34	1–102699–6
OBSOLETE	4	1.406	.106	1.632	1.500	15	32	1–102699–5
	4	1.306	.106	1.532	1.400	14	30	1–102699–4
OBSOLETE	4	1.206	.106	1.432	1.300	13	28	1–102699–3
	4	1.106	.106	1.332	1.200	12	26	1–102699–2
OBSOLETE	4	1.006	.106	1.232	1.100	11	24	1–102699–1
OBSOLETE	4	.906	.106	1.132	1.000	10	22	1–102699–0
	4	.806	.106	1.032	.900	9	20	102699–9
	4	——	.406	.932	.800	8	18	102699–8
	4	——	.306	.832	.700	7	16	102699–7
	4	——	.306	.732	.600	6	14	102699–6
	4	——	.206	.632	.500	5	12	102699–5
	4	——	.206	.532	.400	4	10	102699–4
	4	——	.106	.432	.300	3	8	102699–3
	4	——	.106	.332	.200	2	6	102699–2
OBSOLETE	4	2.006	.106	2.232	2.100	21	44	102699–1

THIS DRAWING IS A CONTROLLED DOCUMENT.

DIMENSIONS: INCHES

TOLERANCES UNLESS OTHERWISE SPECIFIED:
0 PLC ± –
1 PLC ± –
2 PLC ± –
3 PLC ± .005
4 PLC ± –
ANGLES ± –

MATERIAL

FINISH SEE TABLE

DWN R BROWN 14APR05
CHK J GESFORD 14APR05
APVD J GESFORD 14APR05
PRODUCT SPEC —
APPLICATION SPEC —
WEIGHT —

Tyco Electronics Corporation
Harrisburg, Pa 17105–3608

NAME HDR ASSY, MOD II, COMPLIANT
PIN, DBL ROW, .100 X .100 CL,
4 SIDED SHROUD

SIZE A1 | CAGE CODE 00779 | DRAWING NO C–102699 | RESTRICTED TO —

CUSTOMER DRAWING | SCALE 4:1 | SHEET 1 OF 1 | REV K